Board of Trustees – Table of Contents
May 14, 2025

Meeting Agenda	2
Letter of Interest; Robin Kantzler	3
Letter of Interest; Nadine Breunig	4
(Special) Meeting Minutes (April)	5
Meeting Minutes (April)	6
Director's Report	8
Program Stats	10
Circulation Stats	11
(new) Circ Stats	14
Monthly Expenses	16
Budget Comparison	17
Petty Cash Reconciliation	19
(new) Petty Cash	20
SCLS Foundation Report	21
Vogel Brothers (Drive-up Window)	22

Cambridge Community Library Board of Trustees
Monthly Agenda for May 2025
On May 14th
Amundson Community Center Room

CALL TO ORDER
ROLL CALL
INTRODUCTION OF GUESTS
PUBLIC INPUT (15 minutes maximum)
INTERVIEW(s) OPEN BOARD POSITION

Pam Schmitt (6:40)
Robin Kantzler (7:00)
Nadine Breunig (7:15)

APPROVAL OF MONTHLY REPORTS:

Library Board Minutes
Director's Report
Program Report
Monthly Circulation Stats

APPROVAL OF TREASURER'S REPORT:

Monthly Expenses
Budget Comparison
Petty Cash Reconciliation
SCLS Foundation Report

VILLAGE REPORT
FRIENDS OF THE LIBRARY REPORT
SCHOOL DISTRICT REPORT

ACTION AGENDA:

OLD BUSINESS

1. Drive-Up Window Update
2. Hiring Update
3. Employee Handbook

NEW BUSINESS

1. Emergency Plan
2. Little Free Food Pantry
3. Donations and Gifts / Thank You Notes

FUTURE AGENDA ITEMS;

NEXT MEETING DATES; Wednesday June 11th

ADJOURNMENT OF LIBRARY BOARD MEETING

NEXT BOARD MEETING DATE: June 11th

April 28, 2025

Samantha Seeman
Director
Cambridge Community Library
101 Spring Water Alley
Cambridge, WI 53523

RE: Open Trustee position

Dear Samantha and Library Board:

With my departure from the Cambridge Community Library as an Assistant Librarian due to the need for full-time work for my family's finances, I am sad to leave the library. I want to continue to support our community's valuable library in any way that I can. While I could plan to attend events, join the Friends of the Library and attend book clubs (which I do plan to do!), serving on the Library Board would be a great way to serve the library as well.

I believe my five years working at the library would be very helpful to the Library Board, including statistics, visuals/displays, circulation, familiarity with staff, programming, challenges, and assets to the community. I also have experience in leadership in other ways which may be helpful. I began this leadership in high school as the drum major for the marching band and received a Service-E award for community service. I have served as Secretary and Treasurer for various associations including my college fraternity, 4-H club, and within work committees throughout my life. Most recently, I have been the chair for the local Farm to School program, co-superintendent for the Cultural Arts Department for the Dane County Fair and the Organization Leader for the local 4-H Club. As well as skills, organization, and leadership experience, these roles have also given me the opportunity of local community service.

I thank you in advance for your consideration in this important role of trustee for the Library Board. I live in the township of Christiana.

Sincerely,

RKantzler

Robin Kantzler
384 County Rd A, Cambridge, WI 53523
608-220-7456
robinkantzler@gmail.com

Nadine Breunig
104 W Ridge Circle
Cambridge, WI 53523
nadinefaye@msn.com
920.342.9261

05/10/2025

Members of the Cambridge Public Library Board
Cambridge Public Library
101 Spring Water Alley
Cambridge, WI 53523

Dear Cambridge Public Library Board,

I am writing to express my interest in serving on the board of trustees for the Cambridge Public Library. As an advocate for literacy, community engagement, and public access to knowledge, I believe that my skills, experiences, and ideologies make me an ideal candidate for this position.

Throughout my professional career and personal endeavors, I have consistently demonstrated a commitment to fostering educational and cultural growth within our community. In the past, I have served on the Cambridge PTO board for several years, worked as an educational aide at both the Cambridge Elementary School and Nikolay Middle School, and been actively involved in the community educational culture during my children's younger school years.

I am confident that my dedication to public service, along with my diverse skill set, would be an asset to the board of trustees. I am eager to collaborate with fellow board members and library staff to enhance the quality and reach of the Cambridge Public Library's programs and resources.

Thank you for considering my letter of interest. I look forward to the opportunity to discuss how I can contribute to the continued success and growth of the Cambridge Public Library.

Sincerely,

Nadine Breunig

Nadine Breunig

Cambridge Community Library
Board of Trustees Special Meeting Minutes
April 23, 2025
6:00 PM

Present/RollCall: Jennifer Trendel, Kristin Martin, Samantha Seeman,Jennifer Simdon Budewitz, Matthew Gausmann, Deborah Brown and Cari Redington.

Call to Order: President Trendel called the meeting to order at 6:04 PM.

Introduction of Guests: None

Public Input: None

Action Agenda:

Old Business

1. Open Library Board of Trustees position-Trustee Hollenbeck is no longer the representative for the Village Board. President Trendel will maintain her President role. Will open the position up for a short period of time and interview candidates. Director Seeman will post the position. Looking to interview candidates at the May meeting.

New Business

1. Review of Cambridge Community Library Employee Handbook-Discussed and reviewed.
2. Suggested edits of Employee Handbook-Discussed and reviewed. Recommended to remove Appendix A. CCL specific policies need updating and revisions.

Upcoming meetings:
5/14//25 6:30 PM-Library Board Meeting

Trustee Redington made a motion to adjourn, seconded by Trustee Brown at 8:00 PM. Discussion. Vote. Approved.

Submitted by Kristin Martin

Cambridge Community Library Board of Trustees
Monthly Agenda for April 2025
On April 9th
Amundson Community Center Room

CALL TO ORDER: at 6:32 by President Trendel
ROLL CALL Present: Matthew Gausmann, Paula Hollenbeck, Cari Redington, Jennifer Trendel, Deb Brown, Jennifer Simdon Budewitz, Samantha Seeman
I
NTRODUCTION OF GUESTS - No guests

PUBLIC INPUT (15 minutes maximum) - No input

APPROVAL OF MONTHLY REPORTS:
Library Board Minutes
Director's Report
Program Report
Monthly Circulation Stats

Trustee Hollenbeck made a motion to approve the monthly reports, Trustee Gausmann seconded.

- Discussion: Update on DPI concerns with cuts of Federal funding.

Motion approved unanimously

APPROVAL OF TREASURER'S REPORT:
Monthly Expenses
Budget Comparison
Petty Cash Reconciliation
SCLS Foundation Report-

Trustee Simdon Budewitz made a motion to approve the Treasurer's report. Gausmann seconded.

- Trustee Redington reviewed 3666.57 for approval. The Frontier bill is about $1,000 a month. This may be something the board will look at changing by moving to a different phone service.
- $18,094.20 approved for this month. This is on par with our monthly expenses.

Approved on roll call vote

VILLAGE REPORT - by Trustee Hollenbeck

- Approvals for Memorial Day events for the Lions club
- Spring Water alley was approved for buildout this year. The Village has requested to work around the Book Sale the first Saturday of August.

FRIENDS OF THE LIBRARY REPORT - by Trustee Brown

- Chocolate Frenzy Thursday April 10
- Membership about the same as previous years; will be looking things they can do to increase their membership
- Working on By-law rewrites, goal to have it done by the book sale
- Looking into the "annual passes" that they will donate to the library this year.

SCHOOL DISTRICT REPORT - Trustee Simdon Budewitz

- Spanish teacher hired for next year.
- Three superintendent candidates currently interviewing

Cambridge Community Library Board of Trustees
Monthly Agenda for April 2025
On April 9th
Amundson Community Center Room

ACTION AGENDA:

OLD BUSINESS

1. Safer Communities OAK Box - The Box has been installed. Signage has been installed regarding box in the library and box at the Firehouse.
2. Drive-Up Window Update – Vogel Brothers bid is under the amount required to go out to bid. Trustee Hollenbeck made a motion to Approve the bid from the Vogel Brothers for the update of the Drive-up window not to exceed $24,999. Seconded by Trustee Redington.
   Discussion: Questions raised about the internal drawer and building permits.
   Roll call vote: Approved on a roll call vote by all members
3. Jefferson County Board Appointments – current members forwarded to Jefferson county and will be approved at the meeting on April 15th. Two additional members could be assigned by Jefferson County, but there are no indications that will be the case at this time.
4. Hiring Update - Amanda was hired on March 31st. She does have previous library experience and enthusiasm for programing, etc. Should be fully up to speed by June.
5. Motion to convene into closed session made by President Trendel seconded by Trustee Redington Approved by all on roll call
   a. Motion to reconvene into open by Trustee Redington seconded by Trustee Simdon Budewitz
6. Cambridge Foundation Grant – Full request was approval. Dollars have been deposited. Will start on the two projects as soon as possible. Hoping to have them ready for Summer.

NEW BUSINESS

1. Library Testimonials – SPI sent out a message on 3/31 looking for Wisconsin Public Library testimonials. Looking for a human element for requests to not defund Libraries. The Library staff will assist if patrons are interested in submitting a testimonial.
2. Donations and Gifts / Thank You Notes – Three donations and donation box. Donations from: Dona Merg, Paula Hollenbeck, and Cassandra Schwatz In Memory of Betty Prescott.

FUTURE AGENDA ITEMS; Emergency Plan for the Library (Tornado drills, etc.)

NEXT MEETING DATES: Wednesday April 23rd (Special Meeting Employee Handbook review) and potluck 6pm

Wednesday May 14th (Board Meeting)

ADJOURNMENT OF LIBRARY BOARD MEETING

Trustee Hollenbeck motion to adjourn, Trustee Brown seconded. Approved unanimously.

2025 Director's Report
Library Board of Trustees Meeting
May 14th @ 6:30pm

Updates

- Yotos have arrived! Kayla and I have been working on how we are going to catalog and process them now that they are in, and have come up with a plan. Our goal is to have all three players, and all the cards we have ordered so far, ready for the beginning of June.

Continuing Education / Training

- Staff participated in MFA Bypass related cyber training from Infosec
- Youth Staff attended
    - CCBC Choices (older kids & teens)
- DPI recently launched a new resource for library directors called Policy of the Month Club. It's intended use is to help directors dedicate some time each month to updating, and maintaining library policies, since they are so essential to consistent and equitable service. Their initial plans for the group include access to a national platform for sharing and learning about library policies. They also plan to send out a Policy Audit tool, which should help in the consistent maintenance of the library's policies. Participation is not mandatory, simply just what you are able to contribute.

Gifts / Donations / Monies Received

- **Donations**
- **Monies Received**
    - Beyond the Page EZ Grant(s) in the amount of $310 & $380
    - 1st quarter ecommerce $65.94

Upcoming Time Off / Out of Building

- Thursday May 15th (9am-1pm) – All Director's Meeting @ Oregon Public Library

2025 Director's Report
Library Board of Trustees Meeting
May 14th @ 6:30pm

Program Highlights (April)

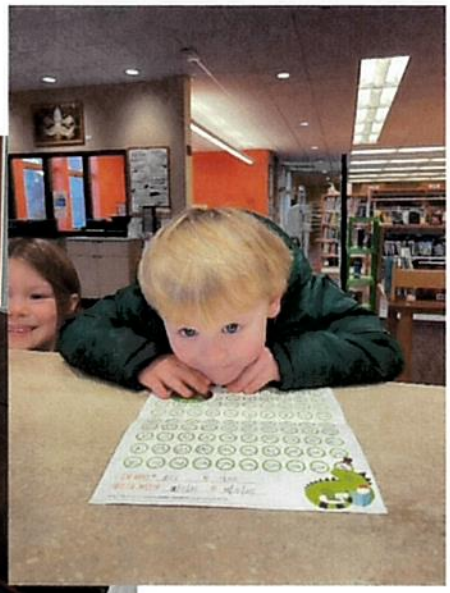

Date	Activity	Age Group	# Attended	Activity Type	Organizer	Notes
4/1/2025	Scrabble	All Age...	4	Self-Running		Notes
4/2/2025	Storytime(Buttons)	Kids (u...	13	Series	Patty	Notes
4/4/2025	Storytime(Buttons)	Kids (u...	26	Series	Patty	Notes
4/8/2025	Scrabble	All Age...	5	Self-Running		Notes
4/8/2025	Chess Club	All Age...	2	Club	Patty	Notes
4/9/2025	Storytime(April Showers)	Kids (u...	27	Series	Patty	Notes
4/9/2025	Senior Luncheon(Bingo)	Adults	38	Single	Patty	in collaboration with CAP Senior Lunch (Kerry Marren)
4/11/2025	Storytime(April Showers)	Kids (u...	9	Series	Patty	Notes
4/11/2025	Library Celebration(cookies)	All Age...	37	Single	Patty	Notes
4/14/2025	Monday Night Book Club	Adults	14	Club	Samantha	Atonement
4/15/2025	Scrabble	All Age...	3	Self-Running		Notes
4/16/2025	Storytime(Money)	Kids (u...	17	Series	Patty	Notes
4/16/2025	Poetry Workshop	Adults	0	Single	Amanda	Notes
4/17/2025	Book Club 2nd Meeting	Adults	0	Club	Samantha	Atonement
4/18/2025	Storytime(Money)	Kids (u...	11	Series	Patty	Notes
4/18/2025	Friday Flick(Green and Gold)	Adults	16	Series	Patty	Notes
4/22/2025	Scrabble	All Age...	4	Self-Running		Notes
4/22/2025	Between the Pages club	Adults	4	Club	Samantha	Project Hail Mary
4/23/2025	Storytime(Picnic)	Kids (u...	15	Series	Patty	Notes
4/25/2025	Storytime(Picnic)	Kids (u...	26	Series	Patty	Notes
4/29/2025	Scrabble(2 games)	All Age...	4	Self-Running		Notes
4/30/2025	Storytime(construction)	Kids (u...	15	Series	Patty	Notes

Total Attendance	290
Total Programs	22
Kids Under 5	9
School Age Kids	0
Teens	0
Adults	6
All Ages	7
Self-Running	5

Passive Programming

Storywalk Guesstimate	3
Coloring Sheets	61

2025 Monthly Statistics	JANUARY	FEBRUARY	MARCH	APRIL	MAY	JUNE	JULY	AUGUST	SEPTEMBER	OCTOBER	NOVEMBER	DECEMBER	YTD SUM	YTD AVG
CIRCULATION ACTIVITY														
2025 Total CKO current month	3,402	3,200	3,358	3,182									13,142	3,286
2024 Total CKO current month	3,578	3,568	3,916	3,325	3,510	3,127	3,791	3,309	2,914	3,262	3,179	2,959	40,438	3,370
% + or - CKO monthly yr to yr	5.17%	-11.50%	-16.60%	-4.49%										-6.86%
% + or - CKO YTD	-4.92%	-7.61%	-9.96%	-8.65%										-7.79%
% CBR Items	52.85%	56.50%	58.10%	56.60%										56.01%
% SCLS Items	47.15%	43.50%	41.90%	43.40%										43.99%
Loaned to Other Libraries	2,614	2,265	2,338	2,579									9,796	2,449
Borrowed from Other Libraries	1,604	1,392	1,407	1,381									5,784	1,446
2025 CKI current month	2,564	2,543	2,552	2,816									10,475	2,619
2024 CKI current month	2,565	2,831	2,991	2,854	2,759	2,536	2,897	2,735	2,246	2,614	2,471	2,367	31,866	2,656
USE COUNTS														
Patrons: Adult	3,052	2,793	2,870	2,795									11,510	2,878
Patrons: Children	188	270	275	237									970	243
Patrons: Staff	162	137	211	150									660	165
New Patron Registration	18	16	18	24									76	19
Dane County: Village	1,127	975	1,021	1,012									4,135	1,034
Dane County: Rural (no lib)	604	536	500	493									2,133	533
Dane County: City (w/ lib)	61	134	165	147									507	127
Jefferson County: Village	57	36	41	47									181	45
Jefferson County: Rural (no lib)	1,373	1,336	1,499	1,290									5,498	1,375
Jefferson County: City/Vil (w/ lib)	68	56	63	55									242	61
Other Counties: Rural (no/ lib)	3	2	2	1									8	2
Other Counties: City/Vil (w/ lib)	15	16	14	19									64	16
HOLD ACTIVITY														
2025 Holds Placed	1,453	1,239	1,257	1,219									5,168	1,292
% YTD change from 2024	-12.63%	-13.19%	-14.47%	-12.75%										-13.26%
2024 Holds Placed	1,663	1,438	1,516	1,306	1,129	1,184	1,233	1,082	1,159	1,422	1,209	1,147	15,488	1,291
CATALOG ACTIVITY														
Holdings Entered	188	163	125	227									703	176
Holdings Deleted	131	99	63	43									336	84
INTER LIBRARY LOAN														
ILL	11	10	8	12									41	10
MATERIAL TYPE														
Print														
Books: YA/Adult	1,622	1,410	1,465	1,417									5,914	1,479
Books: Juvenile	906	935	1,056	989									3,886	972
Magazines: YA/Adult	54	47	74	38									213	53
Magazines: Juvenile	7	3	10	7									27	7
Audio Books														
Books on CD: YA/Adult	63	58	37	15									173	43
Books on CD: Juvenile	0	1	0	3									4	1

2025 Monthly Statistics	JANUARY	FEBRUARY	MARCH	APRIL	MAY	JUNE	JULY	AUGUST	SEPTEMBER	OCTOBER	NOVEMBER	DECEMBER	YTD SUM	YTD AVG
Playaway: YA/Adult	13	6	15	13									47	12
Playaway: Juvenile	1	1	2	0									4	1
Audio Music														
CD: YA/Adult	91	74	53	62									280	70
CD: Juvenile	5	6	8	5									24	6
Visual/AV														
DVDs: YA/Adult	378	418	377	376									1,549	387
DVDs: Juvenile	72	85	92	81									330	83
DVDs: TV Shows	141	116	119	142									518	130
Software: YA/Adult	0	0	0	0									0	0
Software: Juvenile	0	0	0	0									0	0
Video Games: YA/Adult	3	5	5	4									17	4
Video Games: Juvenile	0	0	0	0									0	0
Misc AV: YA/Adult	1	6	9	5									21	5
Misc AV: Juvenile	0	0	0	0									0	0
ENRICHMENT PASSES														
WI State Park Pass (checkouts)	0	0	0	0									0	0
Milw Co Zoo Pass (checkouts)	0	1	5	1									7	2
Milw Co Zoo Pass (people)	0	0	23	3									26	7
OVERDRIVE														
2025 Overdrive	625	614	616										1,855	
2024 Overdrive	723	608	714	591	612	572	600	569	562	629	614	638	7,432	619
WIRELESS USE														
2025 Users-Total Unique Clients	269	269	291										829	276
Average # of Clients Per Day	19	23	22											21
Average Usage per Client (MB)	230.70	338.30	323.50											297.50

Apr-25	Week 1						Week 2						Week 3						Week 4						Week 5						Weekly Totals					Monthly Totals	
	4/1/25 - 4/5/25						4/6/25 - 4/12/25						4/13/25 - 4/19/25						4/20/25 - 4/26/25						4/27/25 - 4/30/25												
	M	T	W	TH	F	S	M	T	W	TH	F	S	M	T	W	TH	F	S	M	T	W	TH	F	S	M	T	W	TH	F	S	Wk 1	Wk 2	Wk 3	Wk 4	Wk 5	This Mo	Last Mo
Drive Up																																					
Daily Patrons		11	8	6	12	1	7	7	9	4	9	2	9	8	11	5	7	6	7	3	7	10	8	6	6	8	5				38	38	46	41	19	182	166
Phone Calls		6	3	3	4	2	5	4	11	3	4	2	10	5	6	3	3		3	4	4	9	3	2	3	8	5				18	29	27	25	16	115	125
Pick List		77	69	42	37	47	118	71	89	59	50	21	94	65	61	61	46	30	122	52	36	50	31	60	91	67	59				272	408	357	351	217	1605	1623
E-Mails																															0	0	0	0	0	0	0
Copies/Prints													1									1									0	0	1	1	0	2	0
Faxes																															0	0	0	0	0	0	0
Library Cards																															0	0	0	0	0	0	0
Acct Lookups*		10	8	6	12	1	8	7	8	5	9	1	6	7	11	5	7	4	9	3	7	12	8	5	6	7	5				37	38	40	44	18	177	166
Reference ?s*		1	1	2	1	2		2	4				7			1	1	1	2	1		1			2	2	1				7	6	10	4	5	32	20
Red Bins Sent		6	5	3		4	4	6	5	4		5	4	4	4	3		4	4	4	4	4		6							18	24	19	22	0	83	100
Red Bins Rec'd		5	5	6	3		3	4	4	4	2		4	5	4	4	2		3	5	4	4	4								19	17	19	20	0	75	80
Other																															0	0	0	0	0	0	0
Inside Circ Desk																																					
Daily Patrons		98	51	57	81	29	43	49	77	63	75	39	64	61	63	74	80	21	56	53	65	57	88	33	54	40	65				316	346	363	296	159	1480	1574
Copy/Scan/Print		8	6	4	9	3	7	9	5	8	3	2	6	16	7	4	15		5	8	6	5	5	4	7	3	5				30	34	48	28	15	155	134
Faxes		1		2	1		1		1	1	2		2		1	1				1	2	1	3		2	1					4	5	4	7	3	23	16
Tech Assist		1	2		2	1	1	3	3	1	1	1	1	3	3		4		2			2	2		1						6	10	11	4	1	32	40
Library Cards		2	1		1	3	1		1		1			3	1		5		3			1			3		1				7	3	9	1	4	24	18
Acct Lookups*		2	2	7	5	3	1	3	3	6	3		1		5	4	5	2	3		5	3	3				3				19	16	17	11	3	66	92
Reference ?s*		2	3	2	5	1	1	1	6	2	3		1	3		6	6	8	2	2	2	4				2	1				13	13	24	8	3	61	51
Newspaper		1	1		1	2	1	1	1	2	1		2	1	1	2	2	1	2	2	2	1	1			2	1				5	6	9	6	3	29	24
Other			1	2	1				2	1	2			1	3		5			1	1		1				1				4	5	9	3	1	22	24
From Reservation Sheet:																																					
Comp Use (Hrs)		26	23	12	10	11	17	27	14	21	8	7	19	28	14	21	22	8	24	21	17	16	10	10	22	22	25				82	94	98	96	97	105	401
Comp Use (Ppl)		13	10	4	4	7	7	10	5	6	2	2	6	11	4	6	10	4	9	9	6	7	3	2	8	9	8				38	32	36	35	35	37	134
Room Resv (Hrs)		6		3.5	1.5	2.5			2	1.75	1	2	2.25	4	2	2.5				4	1		1.5	2	1	2	3.5				13.5	6.75	10.75	8.5	6.5	46	47
Attendees		9		4	2	1			1	2	2	6	1	7	1	12				10	1		4	6	3	4	3				16	11	21	21	10	79	82

4/2/2025	Storytime (Wed & Fri 10am)
3/1/2025	Storywalk (Mar-May)
4/2/2025	Painting Crew in Community Room
4/3/2025	FOL Chocolate Friendzy (library closed at 6pm)
4/7/2025	National Library Week (What I love about my library)
4/9/2025	Sr Lunch: Mike Leckrone (cancelled due to his illness)
4/9/2025	Library Board Meeting (6:30-8pm)
4/11/2025	Library Celebration (3-4:30pm)
4/16/2025	Poetry Writing Workshop (3-4pm)
4/18/2025	Friday Flick (1pm)
4/22/2025	Betw the Pages Book Club (6-7pm)
4/23/2025	Library Board Policy Mtg (6pm)

NOTE: No longer counting delivery bins received or sent as of 4/28/25

Circulation

	January	February	March	April	May	June	July	August	September	October	November	December	YTD Total
ADULT FICTION	629	615	572	608									2424
ADULT NONFICTION	562	454	459	438									1913
YA FICTION	75	73	74	85									307
YA NONFICTION	14	5	7	19									45
LARGE PRINT	303	234	318	237									1092
PAPERBACKS	39	29	35	30									133
MAGAZINES	54	47	74	38									213
VIDEOS	519	536	499	520									2074
OTHER AV	171	147	116	97									531
CHILDRENS FICTION	717	744	847	827									3135
CHILDRENS NONFICTION	189	191	209	162									751
CHILDRENS PAPERBACKS													0
CHILDRENS MAGAZINES	7	3	10	7									27
CHILDRENS VIDEOS	72	85	92	81									330
CHILDRENS OTHER AV	47	35	38	28									148
BOOKS IN PRINT - DPI	2522	2339	2520	2401									9782
AUDIO MATERIALS - DPI	173	146	115	98									532
VIDEO MATERIALS - DPI	591	619	588	599									2397
OLL Requests	15	4	11	10									40
OLL Received	9	10	8	9									36
OLL Returned	8	8	10	15									41
OLL Unfulfilled	1	2	1	6									10

Cataloging

	January	February	March	April	May	June	July	August	September	October	November	December	YTD Total
Acquisitions													
Adult Print	42	40	71	49									202
Magazines	33	22	42	29									126
Media	12	4	8	11									35
YA Print	19	9	14	15									57
Youth Print	44	34	59	40									177
Youth Media	3	0	6	6									15
Collection Management													
Withdrawals	131	99	63	43									336
Replacements	1	2	8	5									16
Total Collection Management	**132**	**101**	**71**	**48**	**0**	**0**	**0**	**0**	**0**	**0**	**0**	**0**	**352**
Total Acquisitions	**153**	**109**	**200**	**150**	**0**	**0**	**0**	**0**	**0**	**0**	**0**	**0**	**612**

Miscellanieous

	January	February	March	April	May	June	July	August	September	October	November	December	YTD Total
Door Count	1527	1497	1740	1662									6426
Reference Questions	55	37	71	93									256
Faxes Sent	18	7	16	23									64
Book Donations (boxes)													0
Library Card Signups													
Senior	8	6	6	7									27
Adult	10	3	9	14									36
Youth	0	4	1	2									7
Total # of Library Cards Issued	**18**	**13**	**16**	**23**									**70**
Enrichment Passes													
State Park Pass (CKO)	0	0	0	0									0
Milwaukee Zoo (CKO)	0	1	5	1									7
Milwaukee Zoo (PPL)	0	1	23	3									27
Computer Usage													
Computer Reservations	115	122	134	105									476
Computer Reservations (hrs)	306	348	401										1055
Wireless Use (Unique clients)	269	269	291	319									1148
Wireless Use (ave. #/day)	19	23	22	25									89
e-Resources													
NovelList	0	0	0	0									0
Gale Literature Resource Center		0	0	0									0
Creativebug													0
Consumer Reports	0	0	0	0									0
Chilton Library	0	0	0	0									0
Ancestry	11	137	13	325									486
Transparent Language	0	0	0	0									0
Overdrive	625	614	616	708									**2563**
Overdrive - ebook	*164*	*158*	*170*	*138*									*630*
Overdrive - eaudio	*432*	*428*	*417*	*445*									*1722*
Overdrive - emagazine	*29*	*28*	*29*	*32*									*118*

Programs & Services

	January	February	March	April	May	June	July	August	September	October	November	December	YTD Total
Room Use (reservations)	34	33	30	26									123
Room Use (people)	84	86	82	59									311
Digital Literacy													
Tech Assistance	25	37	40	32									134
By appointment													0
appointment hrs.													0
Programs													
Adult (19+)	6	5	5	6									22
Teen (13-18)	1	0	0	0									1
Childrens Programs													
Early Childhood (0-5)	4	8	6	9									27
School-Aged (6-12)	0	0	1	0									1
General	4	3	3	7									17
Total Programs	15	16	15	22									68
Total Attendance (Programs)	100	186	238	290									814

Usage Counter

	January	February	March	April	May	June	July	August	September	October	November	December	YTD Total
Adult Patrons	3052	2793	2870	2795									11510
Child Patrons	188	270	275	237									970
Staff	162	137	211	150									660
				24									
Dane County: Village	1127	975	1021	1012									4135
Dane County: Rural	604	536	500	493									2133
Dane County: City	61	134	165	147									507
Jefferson County: Village	57	36	41	47									181
Jefferson County: Rural	1373	1336	1499	1290									5498
Jefferson County: City	68	56	63	55									242
Other Counties: City	3	2	2	1									8
Other Counties: Rural	15	16	14	19									64

	Jan	Feb	March	April	May	June	July	Aug	YTD TOTAL
Expenses									
Materials Expenses	$ 5,963.22	$ 2,298.62	$ 2,796.36	$ 2,916.41					$ 13,974.61
Operations Expenses	$ 25,909.89	$ 5,951.37	$ 3,666.57	$ 7,110.09					$ 42,637.92
Personnel Expenses	$ 11,061.91	$ 11,082.21	$ 10,245.18	$ 11,045.38					$ 43,434.68
Benefits Expenses	$ 5,326.51	$ 1,437.62	$ 1,386.09	$ 2,169.27					$ 10,319.49
Cash Drawer									
Materials	$ 8.00	$ 8.22	$ 6.33	$ 10.55					$ 33.10
Postage		$ 4.40	$ 4.40	$ 5.11					$ 13.91
Programming	$ 11.97	$ 14.89	$ 7.98						$ 34.84
Supplies				$ 18.13					$ 18.13
Misc.	$ 15.77	$ 14.10		$ 14.67					$ 44.54
Janitorial	$ 8.04								$ 8.04
Revenues									YTD TOTAL
Total Donations		$ 700.00	$ 320.00						$ 1,020.00
Total Monies Received		$ 95,198.57	$ 55,805.00	$ 755.94					$ 151,759.51
Donation Box Deposit		$ 145.00	$ 73.00						$ 218.00
SCLS Foundation									
Interest	$ 23.05	$ 92.62	$ 228.56						
Fees	$ (75.02)	$ (76.61)	$ (76.32)						
Gains/Losses	$ 1,363.77	$ (255.88)	$ (1,662.87)						
Cash Drawer Deposits	$ 210.00	$ 294.00	$ 224.00	$ 597.30					$ 1,325.30
Faxes	$ 10.50	$ 3.50	$ 9.75	$ 23.75					$ 47.50
Copies	$ 179.30	$ 231.50	$ 198.25	$ 471.55					$ 1,080.60
Laminating		$ 1.00	$ 2.00	$ 10.00					$ 13.00
Earbuds/Flash Drives		$ 10.00							$ 10.00
Card Replacements	$ 1.00		$ 3.00						$ 4.00
Lost/Damaged Materials	$ 19.20	$ 48.00	$ 11.00	$ 92.00					$ 170.20

Foundation Previous Month Ending Value
$62,793.74
Foundation Current Month Ending Value
$61,428.10

Fund: 150 - LIBRARY FUND

Account Number		2024 Actual 12/31/2024	2025 Actual 04/30/2025	2025 Budget	Budget Status	% of Budget
150-00-41111-000-000	PROPERTY TAX - LIBRARY	105,000.00	0.00	95,000.00	-95,000.00	0.00
TAXES		105,000.00	0.00	95,000.00	-95,000.00	0.00
150-00-43565-000-000	COVID-19 GRANTS	0.00	0.00	0.00	0.00	0.00
150-00-43720-000-000	DANE COUNTY LIBRARY GRANTS	57,803.00	52,870.00	0.00	52,870.00	0.00
150-00-43725-000-000	OTHER COUNTY REIMBURSEMENT	249.80	81.58	0.00	81.58	0.00
150-00-43730-000-000	JEFFERSON COUNTY LIBRARY GRANT	100,100.00	95,100.00	0.00	95,100.00	0.00
150-00-43740-000-000	FOUNDATION GRANT	9,700.00	2,900.00	0.00	2,900.00	0.00
INTERGOVERNMENTAL REVENUES		167,852.80	150,951.58	0.00	150,951.58	0.00
150-00-45190-000-000	LIBRARY FEES & FINES	722.79	250.68	0.00	250.68	0.00
FINES, FORFEITS AND PENALTIES		722.79	250.68	0.00	250.68	0.00
150-00-46710-000-000	LIBRARY - GIFTS/DONATIONS	1,716.10	1,838.00	0.00	1,838.00	0.00
150-00-46711-000-000	LIBRARY COPY MACHINE REVENUE	2,786.46	831.05	0.00	831.05	0.00
150-00-46712-000-000	FAX SERVICE	155.25	38.75	0.00	38.75	0.00
150-00-46713-000-000	BOOK RENTAL	0.00	0.00	0.00	0.00	0.00
150-00-46714-000-000	DVD & OTHER MEDIA RENTAL	0.00	0.00	0.00	0.00	0.00
150-00-46750-000-000	IN KIND CONTRIBUTIONS - VILL	0.00	0.00	0.00	0.00	0.00
PUBLIC CHARGES FOR SERVICES		4,657.81	2,707.80	0.00	2,707.80	0.00
150-00-48130-000-000	INTEREST INCOME - LIBRARY	2.84	0.58	0.00	0.58	0.00
150-00-48505-000-000	EMPLOYEE CONTRIB TO INS PREM	0.00	0.00	0.00	0.00	0.00
150-00-48830-000-000	SOUTH CENTRAL LIB SYS	3,035.40	0.00	0.00	0.00	0.00
150-00-48840-000-000	BEYOND THE PAGE EZ GRANT	1,000.00	380.00	0.00	380.00	0.00
150-00-48900-000-000	MISC REVENUES	4,436.73	24.00	0.00	24.00	0.00
CONTRIBUTED CAPITAL		8,474.97	404.58	0.00	404.58	0.00
150-00-49000-000-000	FRIENDS OF CAMBRIDGE LIBRARY	4,150.00	11,000.00	0.00	11,000.00	0.00
150-00-49100-000-000	STAFF OUTSIDE GRANT	0.00	0.00	0.00	0.00	0.00
FRIENDS OF CAMBRIDGE LIBRARY		4,150.00	11,000.00	0.00	11,000.00	0.00
Total Revenues		290,858.37	165,314.64	95,000.00	70,314.64	174.02

Fund: 150 - LIBRARY FUND

Account Number		2024 Actual 12/31/2024	2025 Actual 04/30/2025	2025 Budget	Budget Status	% of Budget
150-00-55110-110-000	LIBRARY - SALARY	60,120.00	18,240.00	59,280.00	41,040.00	30.77
150-00-55110-120-000	LIBRARY - WAGES	81,957.54	25,281.32	89,115.26	63,833.94	28.37
150-00-55110-130-000	LIBRARY - MEDICARE REIMBURSE	0.00	246.00	0.00	-246.00	0.00
150-00-55110-131-000	LIB - BENEFITS RETIRE	7,255.50	2,296.67	7,067.14	4,770.47	32.50
150-00-55110-132-000	LIB - BENEFITS SOC SEC	10,609.77	3,313.20	11,352.24	8,039.04	29.19
150-00-55110-133-000	LIB - HEALTH/DENTAL	0.00	0.00	0.00	0.00	0.00
150-00-55110-134-000	LIB - FLEX BENEFIT	150.77	109.07	350.00	240.93	31.16
150-00-55110-135-000	LIB - LIFE INS	765.24	97.92	700.00	602.08	13.99
150-00-55110-138-000	LIB - POST RETIREMENT FUNDS	0.00	0.00	0.00	0.00	0.00
150-00-55110-150-000	LIB - UNEMPLOY COMP	0.00	0.00	0.00	0.00	0.00
150-00-55110-210-000	LIB - LEGAL/AUDIT/ACCOUNTING	2,597.59	0.00	2,000.00	2,000.00	0.00
150-00-55110-220-000	LIB - UTILITIES	13,244.32	4,994.80	15,700.00	10,705.20	31.81
150-00-55110-221-000	LIB - TELEPHONE	8,503.17	2,576.17	7,000.00	4,423.83	36.80
150-00-55110-223-000	LIB - INTERNET	0.00	0.00	0.00	0.00	0.00
150-00-55110-240-000	LIB BUILDING MAINT & REPAIR	14,759.75	6,020.43	12,500.00	6,479.57	48.16
150-00-55110-240-100	LIB JANITORIAL EXPENSES	1,231.49	306.38	1,000.00	693.62	30.64
150-00-55110-240-200	LIB - JANITOR EXPENSE	0.00	0.00	0.00	0.00	0.00
150-00-55110-241-000	LIB - COMPUTER MAINT & SUPPLY	0.00	0.00	0.00	0.00	0.00
150-00-55110-290-000	LIB - PROGRAMMING	4,926.86	140.21	3,000.00	2,859.79	4.67
150-00-55110-290-100	LIB - COULTER DONATION	0.00	0.00	0.00	0.00	0.00
150-00-55110-291-000	LIBRARY PUBLIC RELATIONS	1,129.12	545.37	700.00	154.63	77.91
150-00-55110-292-000	LIB - COPY MAINT	3,481.01	783.03	3,000.00	2,216.97	26.10
150-00-55110-293-000	LIB - LINK	23,730.17	22,478.00	22,478.00	0.00	100.00
150-00-55110-310-000	LIB - OFFICE SUPPLY	2,091.21	589.04	4,000.00	3,410.96	14.73
150-00-55110-311-000	LIB - POSTAGE	306.36	11.47	400.00	388.53	2.87
150-00-55110-320-000	LIB - SUBSCRIP & PERIODICALS	2,685.85	971.72	2,000.00	1,028.28	48.59
150-00-55110-330-000	LIB - TRAVEL & TRAIN	1,510.38	162.00	1,000.00	838.00	16.20
150-00-55110-341-000	LIB - BOOKS ACQUISITION	24,844.34	6,036.28	23,000.00	16,963.72	26.24
150-00-55110-342-000	LIB - A/V ACQUISITION	4,752.81	1,150.22	5,000.00	3,849.78	23.00
150-00-55110-343-000	LIB - ELEC ACQUISITION	4,703.40	3,006.75	3,000.00	-6.75	100.23
150-00-55110-344-000	LIB - MISC ACQUISITION	33.12	0.00	150.00	150.00	0.00
150-00-55110-390-000	LIB - MISC EXPENSES	452.69	79.99	500.00	420.01	16.00
150-00-55110-400-000	LIB - STAFF GRANT EXP	0.00	0.00	0.00	0.00	0.00
150-00-55110-510-000	LIB - INS PROPERTY	0.00	3,800.00	3,500.00	-300.00	108.57
150-00-55110-511-000	LIB - INS LIABILITY	0.00	0.00	850.00	850.00	0.00
150-00-55110-512-000	LIBRARY - WORKERS COMP	0.00	737.10	1,000.00	262.90	73.71
150-00-55110-800-000	LIB - EQUIPMENT	7,707.65	0.00	0.00	0.00	0.00
150-00-55110-810-000	LIB - CAPITAL	0.00	0.00	0.00	0.00	0.00
150-00-55110-820-000	LIB - BUILDING FUND	0.00	0.00	0.00	0.00	0.00
150-00-55130-000-000	LIBRARY - OTHER	52.95	0.00	170.00	170.00	0.00
CULTURE, RECREATION AND EDU.		283,603.06	103,973.14	279,812.64	175,839.50	37.16
150-00-57000-000-000	CAPITAL OUTLAY-Equipment	0.00	0.00	0.00	0.00	0.00
CAPITAL OUTLAY-Equipment		0.00	0.00	0.00	0.00	0.00
Total Expenses		283,603.06	103,973.14	279,812.64	175,839.50	37.16
Net Totals		7,255.31	61,341.50	-184,812.64	-246,154.14	-33.19

PETTY CASH 2025

Start

	January	February	March	April	May	June	July	August	September	October	November	December	Total
Beginning Drawer Total:	$ 340.54	$ 424.46	$ 354.73	$ 727.30									**$1,847.03**
Cash Left in Drawer Total:	$ 130.54	$ 130.46	$ 130.73	$ 130.00									**$ 521.73**

Income

2025	January	February	March	April	May	June	July	August	September	October	November	December	Total
Copies (Drawer Deposit) 150-00-46711-000-000	$ 210.00	$ 294.00	$ 224.00	$ 597.30									**$1,325.30**
Faxes 150-00-46712-000-000													**$ -**
Earbuds 150-00-48900-000-000													**$ -**
Lost Materials 150-00-48900-000-000													**$ -**
Lost Cards 150-00-48900-000-000					**Now**	**Included**	**in**	**Main**	**Drawer**				**$ -**
Zip Drive 150-00-48900-000-000													**$ -**
Misc Lamenating/Disc Cleaning 150-00-48900-000-000													**$ -**
Total	**$ 210.00**	**$ 294.00**	**$ 224.00**	**$ 597.30**	**$ -**	**$ -**	**$ -**	**$ -**	**$ -**	**$ -**	**$ -**	**$ -**	**$1,325.30**

Expenses

2025	January	February	March	April	May	June	July	August	September	October	November	December	Total
Material 150-00-55110-341-000	$ 8.00	$ 8.22	$ 6.33	$ 10.55									**$ 33.10**
Postage 150-00-55110-311-000		$ 4.40	$ 4.40	$ 5.11									**$ 13.91**
Supplies 150-00-55110-310-000				$ 18.13									**$ 18.13**
Programming 150-00-55110-290-000	$ 11.97	$ 14.89	$ 7.98										**$ 34.84**
Misc. 150-00-55110-390-000	$ 15.77	$ 14.10		$ 14.67									**$ 44.54**
Janitorial Supplies 150-00-55110-240-100	$ 8.04												**$ 8.04**
Total	**$ 43.78**	**$ 41.61**	**$ 18.71**	**$ 48.46**	**$ -**	**$ -**	**$ -**	**$ -**	**$ -**	**$ -**	**$ -**	**$ -**	**$ 152.56**

		Beginning Drawer Balance	Income	Expenses	Deposit Amount	End Drawer Balance	Date Counted
January		$340.54	$245.30	$43.78	$210.00	$130.54	1/31/2025
February		$424.46	$330.25	$41.61	$294.00	$130.46	2/8/2025
March		$354.73	$241.00	$18.71	$224.00	$130.73	3/28/2025
April		$727.30	$644.68	$48.46	$597.30	$130.00	5/2/2025
May							
June							
July							
August							
September							
October							
November							
December							

Cambridge Community Library Fund	Ending Market Value from previous month	Additions (Withdrawals)	Balance After Addtn's/Withdrawl	Proration of Admin Fee	Interest/ Dividend Income	UnRealized Gains/(Losses)	Realized Gains/Losses	Ending Market Value
January 31, 2023		$ 50,000.00	$ 50,000.00	$ (19.97)	$ 8.70	$ 2,492.50	$ -	$ 52,481.23
February 28, 2023	$ 52,481.23	$ -	$ 52,481.23	$ (60.59)	$ 57.72	$ (1,245.13)	$ -	$ 51,233.23
March 31, 2023	$ 51,233.23	$ -	$ 51,233.23	$ (59.02)	$ 214.24	$ 522.25	$ -	$ 51,910.70
April 30, 2023	$ 51,910.70	$ -	$ 51,910.70	$ (60.97)	$ 61.11	$ 767.04	$ (439.82)	$ 52,238.06
May 31, 2023	$ 52,238.06	$ -	$ 52,238.06	$ (60.10)	$ 62.15	$ (647.71)	$ -	$ 51,592.40
June 30, 2023	$ 51,592.40	$ -	$ 51,592.40	$ (59.36)	$ 327.96	$ 1,555.92	$ -	$ 53,416.92
July 31, 2023	$ 53,416.92	$ -	$ 53,416.92	$ (61.45)	$ 20.50	$ 1,275.63	$ -	$ 54,651.59
August 31, 2023	$ 54,651.59	$ -	$ 54,651.59	$ (62.76)	$ 67.12	$ (993.34)	$ -	$ 53,662.61
September 30, 2023	$ 53,662.61	$ -	$ 53,662.61	$ (61.56)	$ 168.54	$ (1,792.76)	$ 13.58	$ 51,990.40
October 31, 2023	$ 51,990.40	$ -	$ 51,990.40	$ (60.36)	$ 138.45	$ (1,020.61)	$ (102.82)	$ 50,945.05
November 30, 2023	$ 50,945.05	$ -	$ 50,945.05	$ (58.73)	$ 74.01	$ 2,996.95	$ -	$ 53,957.28
December 31, 2023	$ 53,957.28	$ -	$ 53,957.28	$ (61.99)	$ 375.63	$ 2,021.20	$ -	$ 56,292.11
January 31, 2024	$ 56,292.11	$ -	$ 56,292.11	$ (64.68)	$ 19.14	$ (39.32)	$ -	$ 56,207.26
February 29, 2024	$ 56,207.26	$ -	$ 56,207.26	$ (64.44)	$ 67.80	$ 1,349.58	$ -	$ 57,560.20
March 31, 2024	$ 57,560.20	$ -	$ 57,560.20	$ (65.96)	$ 217.99	$ 1,246.16	$ 21.63	$ 58,980.02
April 30, 2024	$ 58,980.02	$ -	$ 58,980.02	$ (69.23)	$ 74.12	$ (1,733.65)	$ 8.95	$ 57,260.21
May 31, 2024	$ 57,260.21	$ -	$ 57,260.21	$ (68.49)	$ 75.76	$ 1,664.86	$ -	$ 58,932.34
June 30, 2024	$ 58,932.34	$ -	$ 58,932.34	$ (73.04)	$ 313.83	$ 104.80	$ 19.18	$ 59,297.12
July 31, 2024	$ 59,297.12	$ -	$ 59,297.12	$ (72.24)	$ 73.80	$ 1,366.65	$ -	$ 60,665.32
August 31, 2024	$ 60,665.32	$ -	$ 60,665.32	$ (73.82)	$ 88.06	$ 666.51	$ 192.42	$ 61,538.49
September 31, 2024	$ 61,538.49	$ -	$ 61,538.49	$ (77.82)	$ 204.43	$ 838.91	$ -	$ 62,507.00
October 31, 2024	$ 62,507.00	$ -	$ 62,507.00	$ (75.91)	$ 100.21	$ (1,118.18)	$ -	$ 61,413.13
November 30, 2024	$ 61,413.13	$ -	$ 61,413.13	$ (74.75)	$ 95.16	$ 1,920.47	$ -	$ 63,354.00
December 31, 2024	$ 63,354.00	$ -	$ 63,354.00	$ (76.90)	$ 519.95	$ (2,075.24)	$ -	$ 61,721.81
January 31, 2025	$ 61,721.81	$ -	$ 61,721.81	$ (75.02)	$ 23.05	$ 1,363.77	$ -	$ 63,033.60
February 28, 2025	$ 63,033.60	$ -	$ 63,033.60	$ (76.61)	$ 92.62	$ (255.88)	$ -	$ 62,793.74
March 31, 2025	$ 62,793.74	$ -	$ 62,793.74	$ (76.32)	$ 228.56	$ (1,662.87)	$ 144.99	$ 61,428.10

600 Single Panel Slider

The 600 series Single Panel Slider is specified by many multi-unit operators for its quality construction and adaptability to site-specific needs.

Choose the appropriate glass for your site:

600 INSULATED The 600 series comes standard with 3/4" insulated glass.

600 ENERGY SAVER Choose "Solarban 70XL Insulated Low-E" glass to maximize energy-efficiency and staff comfort. Estimated to save 33% on energy costs associated with the window. NFRC Rated.

600 HURRICANE Choose Smash & Grab Impact Rated Glazing (FPA NOA FL5102.3 – Impact)

600 SECURITY Choose Lexan Level 1 or Smash & Grab glass, and a security bar set for protection against forced entry.

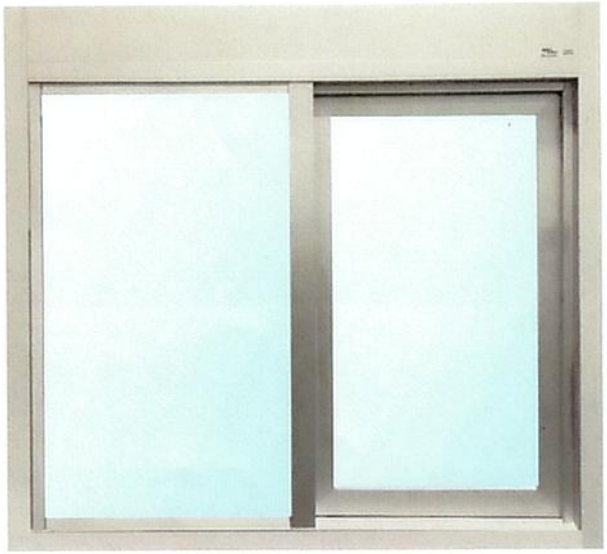

Pictured: right to left from outside view, clear anodized finish.

Choose your mode of operation

◊ **MANUAL OPEN / SELF CLOSE**
Manual open, with patented hands-free gravity close. Economical and easy to maintain.

◊ **MANUAL OPEN / ELECTRONIC RELEASE (MOER)**
Electromagnetic "hold open" feature paired with a presence sensor offers the control of manual open with a gravity-fed close that won't release while interacting with customers. Hands free interaction that is easy to maintain.

◊ **ELECTRIC**
Fully automatic electric, for hands free open & close. Operator steps into adjustable overhead beam to activate.

SIZE

- ◊ 47.5"W x 47.5"H x 4.5"D (Service Opening: 19"W x 39"H
- ◊ **47.5"W x 43.5"H x 4.5"D (Service Opening: 19"W x 35"H)***
- ◊ 47.5"W x 35.75"H x 4.5"D (Service Opening: 19"W x 27"H)
- ◊ 47.5"W x 35.75"H x 4.5"D** (Restricted Service Opening: 15"W x 27"H)
- ◊ 35.75"W x 47.5"H x 4.5"D (Service Opening: 13.5"W x 39"H)
- ◊ 35.75"W x 35.75"H x 4.5"D** (Service Opening: 13.5"W x 27"H)
- ◊ 31.75"W x 26.75"H x 4.5"D*** (Service Opening 12"W x 18"H)

* Most popular
**Meets CA restricted opening requirement—under 432 square inches
*** Meets CA restricted opening requirement—216 square inches

STANDARD FEATURES:

- ◊ Anodized aluminum extrusions and stainless steel combine to give you an attractive window that will not rust, pit or weather
- ◊ Fully assembled, pre-glazed and ready to install
- ◊ Dark Bronze or Clear Anodized Aluminum
- ◊ Self latches every time it closes. Also includes a thumb turn lock, and night locking bar
- ◊ Track free bottom sill provides for a contaminant free surface. Angled toward outside for drainage toward exterior
- ◊ One year parts & labor limited warranty
- ◊ On-staff tech support / stocked parts / nationwide network of service providers

OPTIONAL FEATURES

- ◊ Powder Coat Paint—Tiger Drylac
- ◊ Stainless Steel Shelf to extend sill inside or out (13 ga.)
- ◊ Telescoping Night Time Security Bar Set for additional security
- ◊ Solid Glass Transom
- ◊ AA300 Heated Air Curtain
- ◊ Split Transom with AA100 Fly Fan
- ◊ RCM-20 In-Ceiling (or Soffit) Air Curtain and relay switch
- ◊ RAC-22 Unheated or RAC-E-22 Heated air curtain with mounting kit & relay switch
- ◊ Restriction Panel
- ◊ Hipscan presence sensor ILO Overhead Beam (Electric Windows)

1815 Arthur Drive West Chicago, IL 60185 800.621.5045 630-876-7766 (fax) 630.876.7767

www.ready-access.com email: ready@ready-access.com

600 Single Panel Slider

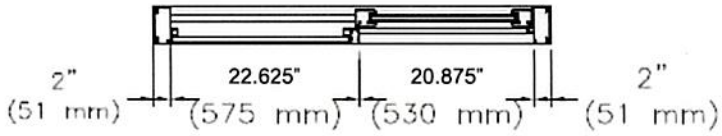

All windows are shipped completely pre-assembled, fully glazed and ready to install.

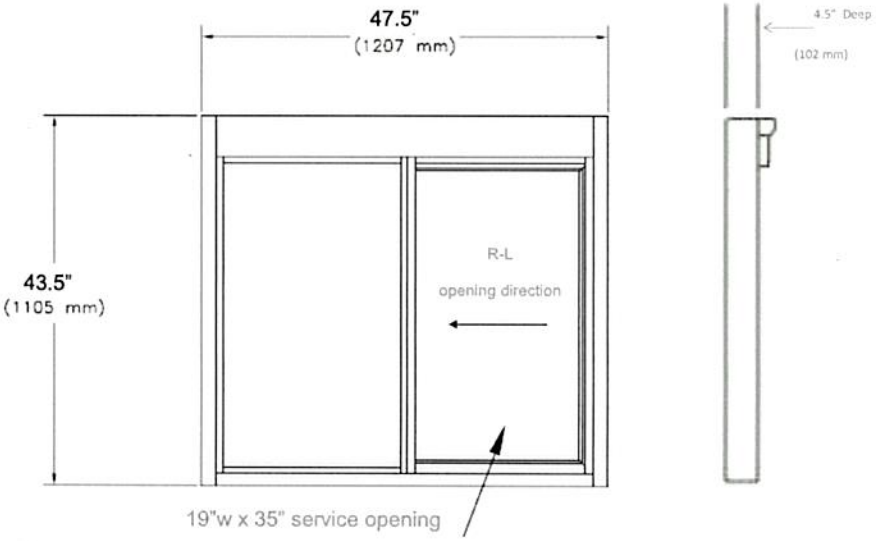

Installation / Owners manual can be retrieved online:
www.ready-access.com

- Installation illustrations are for reference only. Construction conditions and local codes prevail.
- Must be installed level, square and plumb.

SLIDE DIRECTION

Specify Slide Direction from Exterior View

Left to Right from exterior (= R to L from interior)

Right to Left from exterior (= L to R from interior)

ELECTRIC REQUIREMENTS

Manual Open / Self Close Window:

No Power Required

Manual Open / Electronic Release & Fully Automatic Electric:

120v single phase / 60Hz / 15 AMP dedicated circuit

Run power to header on fixed panel side

Window must be on a dedicated circuit

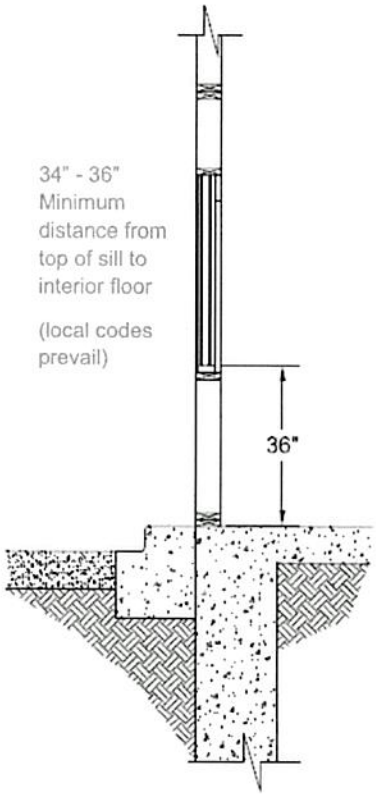

ROUGH OPENING

47.5"W x 47.5"H

- Masonry Rough Opening –48"W x 48"H
- Glazing Rough Opening - 47.75"W x 47.75"H

47.5"W x 43.5"H

- Masonry Rough Opening –48"W x 44"H
- Glazing Rough Opening - 47.75"W x 43.75"H

47.5"W x 35.75"H

- Masonry Rough Opening –48"W x 36.25"H
- Glazing Rough Opening - 47.75"W x 36"H

35.75"W x 47.5"H

- Masonry Rough Opening –36.25"W x 48"H
- Glazing Rough Opening - 36"W x 47.75"H

35.75"W x 35.75"H

- Masonry Rough Opening –36.25"W x 36.25"H
- Glazing Rough Opening - 36"W x 36"H

31.75"W x 26.75"H

- Masonry Rough Opening –32.25"W x 27.25"H
- Glazing Rough Opening - 32"W x 27"H

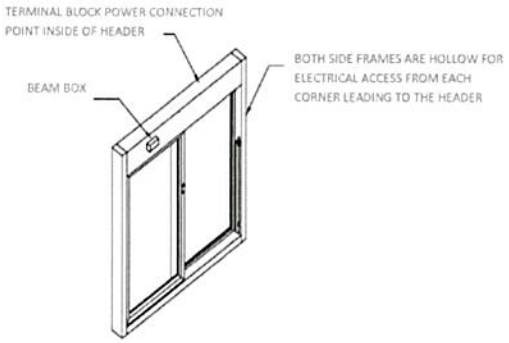

1815 Arthur Drive West Chicago, IL 60185 800.621.5045 630-876-7766 (fax) 630.876.7767
www.ready-access.com email: ready@ready-access.com